AC METAL FACE LONG SENSING DISTANCE PROXIMITY SWITCH

M 12		M 12		M 18	
●	○	●	○	●	○
6 mm	10 mm	6 mm	10 mm	12 mm	20 mm
Stainless steel		Stainless steel		Stainless steel	
●		●		●	

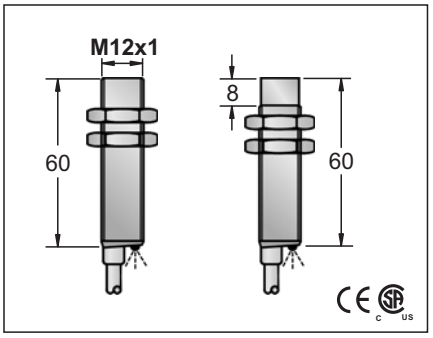

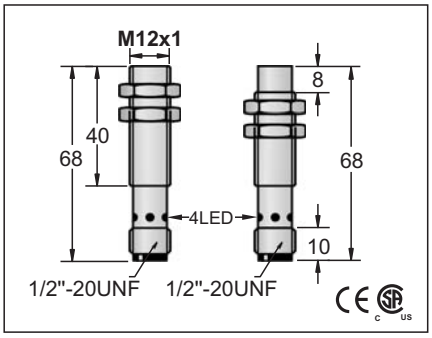

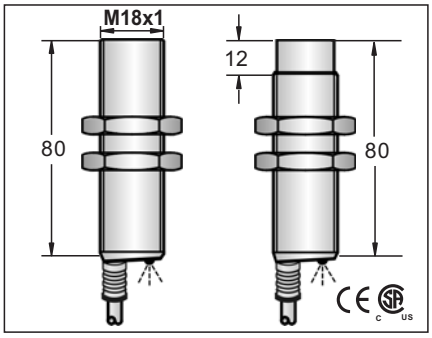

20-250VAC			20-250VAC		
-			-		
<1.8mA			<1.8mA		
400mA			400mA		
<1.8mA			<1.8mA		
5A(20ms)			5A(20ms)		
5mA			5mA		
<8V AC at 40mA			<8V AC at 40mA		
<25Hz			<25Hz		
10ms/10ms			10ms/10ms		
<15%(Sr)			<15%(Sr)		
<1.0%(Sr)			<1.0%(Sr)		
IP67			IP67		
-25°C - +70°C			-25°C - +70°C		
<10%(Sr)			<10%(Sr)		
NO			NO		
–			–		
–			–		
RFI>3V/m / EFT>1KV / ESD>4KV (contact)			RFI>3V/m / EFT>1KV / ESD>4KV (contact)		
IEC 60947-5-2,Part 7.4.1 / IEC 60947-5-2,Part 7.4.2			IEC 60947-5-2,Part 7.4.1 / IEC 60947-5-2,Part 7.4.2		
Stainless steel			Stainless steel		
LCS1-1206A-A3L2	11	LCS2-1210A-A3L2	LCS1-1206A-AUL3	56	LCS2-1210A-AUL3	LCS1-1812A-A3L2	11	LCS2-1820A-A3L2
LCS1-1206A-B3L2	12	LCS2-1210A-B3L2	LCS1-1206A-BUL3	56	LCS2-1210A-BUL3	LCS1-1812A-B3L2	12	LCS2-1820A-B3L2
4φ3x0.15						5.0φ44x0.1		
Approx.77 g		Approx.76 g	Approx.31 g		Approx.30 g	Approx.161 g		Approx.160 g

Note:
Coming Soon : Part numbers with underline

AC METAL FACE LONG SENSING DISTANCE PROXIMITY SWITCH

M 18		M 18		M 18	
●	○	●	○	●	○
12 mm	20 mm	10 mm	20 mm	12 mm	20 mm
stainless steel		stainless steel		stainless steel	
●		●		●	

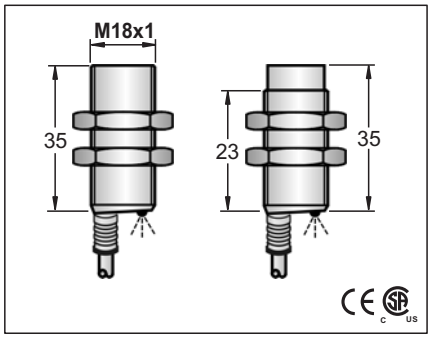

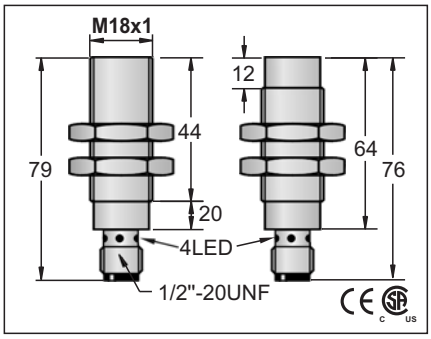

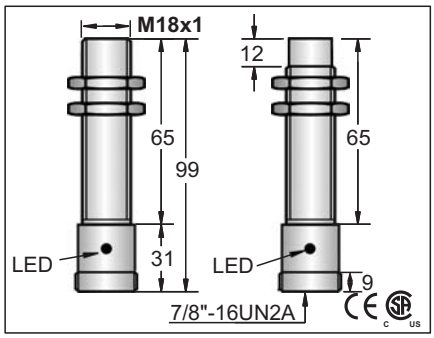

20-250VAC			20-250VAC			20-250VAC		
-			-			-		
<1.8mA			<1.8mA			<1.8mA		
400mA			400mA			400mA		
<1.8mA			<1.8mA			<1.8mA		
5A(20ms)			5A(20ms)			5A(20ms)		
5mA			5mA			5mA		
<8V AC at 40mA			<8V AC at 40mA			<8V AC at 40mA		
<25Hz			<25Hz			<25Hz		
10ms/10ms			10ms/10ms			10ms/10ms		
<15%(Sr)			<15%(Sr)			<15%(Sr)		
<1.0%(Sr)			<1.0%(Sr)			<1.0%(Sr)		
IP67			IP67			IP67		
-25 °C - +70 °C			-25 °C - +70 °C			-25 °C - +70 °C		
<10%(Sr)			<10%(Sr)			<10%(Sr)		
NO			NO			NO		
–			–			–		
–			–			–		
RFI>3V/m / EFT>1KV / ESD>4KV (contact)			RFI>3V/m / EFT>1KV / ESD>4KV (contact)			RFI>3V/m / EFT>1KV / ESD>4KV (contact)		
IEC 60947-5-2,Part 7.4.1 / IEC 60947-5-2,Part 7.4.2			IEC 60947-5-2,Part 7.4.1 / IEC 60947-5-2,Part 7.4.2			IEC 60947-5-2,Part 7.4.1 / IEC 60947-5-2,Part 7.4.2		
Stainless steel			Stainless steel			Stainless steel		
LCS1-1812A-A3S2	11	LCS2-1820A-A3S2	LCS1-1812A-AUL3	56	LCS2-1820A-AUL3	LCS1-1812A-AZL3	65	LCS2-1820A-AZL3
LCS1-1812A-B3S2	12	LCS2-1820A-B3S2	LCS1-1812A-BUL3	56	LCS2-1820A-BUL3	LCS1-1812A-BZL3	65	LCS2-1820A-BZL3
5.0∅44x0.1								
Approx.156 g		Approx.146 g	Approx.69 g		Approx.68 g	Approx.94 g		Approx.91 g

Note:
Coming Soon : Part numbers with underline

AC METAL FACE LONG SENSING DISTANCE PROXIMITY SWITCH

M 30		
●	○	
20 mm	40 mm	
stainless steel		
●		
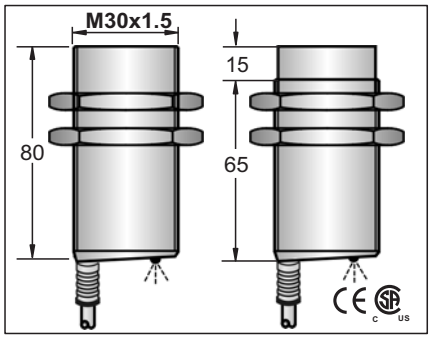		
20-250VAC		
-		
<1.8mA		
400mA		
<1.8mA		
5A(20ms)		
5mA		
<8V AC at 40mA		
<25Hz		
10ms/10ms		
<15%(Sr)		
<1.0%(Sr)		
IP67		
-25°C - +70°C		
<10%(Sr)		
NO		
–		
–		
RFI>3V/m / EFT>1KV / ESD>4KV (contact)		
IEC 60947-5-2,Part 7.4.1 / IEC 60947-5-2,Part 7.4.2		
Stainless steel		
LCS1-3020A-A3L2	11	LCS2-3040A-A3L2
LCS1-3020A-B3L2	12	LCS2-3040A-B3L2
5.8∅3x0.5		
Approx.247 g	Approx.237 g	

M 30		
●	○	
20 mm	40 mm	
stainless steel		
●		
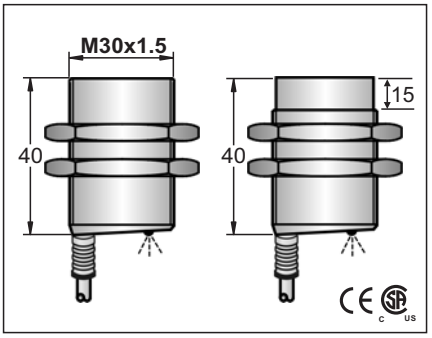		
20-250VAC		
-		
<1.8mA		
400mA		
<1.8mA		
5A(20ms)		
5mA		
<8V AC at 40mA		
<25Hz		
10ms/10ms		
<15%(Sr)		
<1.0%(Sr)		
IP67		
-25°C - +70°C		
<10%(Sr)		
NO		
–		
–		
RFI>3V/m / EFT>1KV / ESD>4KV (contact)		
IEC 60947-5-2,Part 7.4.1 / IEC 60947-5-2,Part 7.4.2		
Stainless steel		
LCS1-3020A-A3S2	11	LCS2-3040A-A3S2
LCS1-3020A-B3S2	12	LCS2-3040A-B3S2
5.8∅3x0.5		
Approx.209 g	Approx.208 g	

M 30		
●	○	
20 mm	40 mm	
stainless steel		
●		
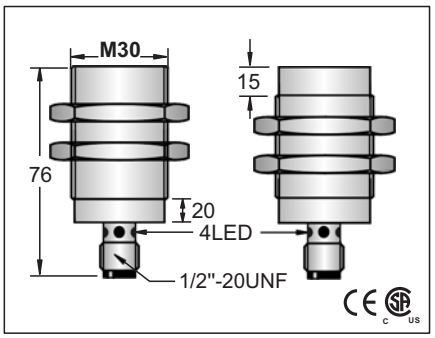		
20-250VAC		
-		
<1.8mA		
400mA		
<1.8mA		
5A(20ms)		
5mA		
<8V AC at 40mA		
<25Hz		
10ms/10ms		
<15%(Sr)		
<1.0%(Sr)		
IP67		
-25°C - +70°C		
<10%(Sr)		
NO		
–		
–		
RFI>3V/m / EFT>1KV / ESD>4KV (contact)		
IEC 60947-5-2,Part 7.4.1 / IEC 60947-5-2,Part 7.4.2		
Stainless steel		
LCS1-3020A-AUL3	56	LCS2-3040A-AUL3
LCS1-3020A-BUL3	56	LCS2-3040A-BUL3
Approx.147 g	Approx.137 g	

Note:
Coming Soon : Part numbers with underline

AC METAL FACE LONG SENSING DISTANCE PROXIMITY SWITCH

M 30		M40		M40	
●	○	●	○	●	○
20 mm	40 mm	30 mm	60 mm	30mm	60 mm
Stainless steel		stainless steel		stainless steel	
●		●		●	

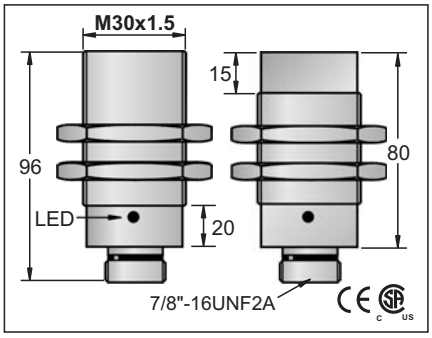

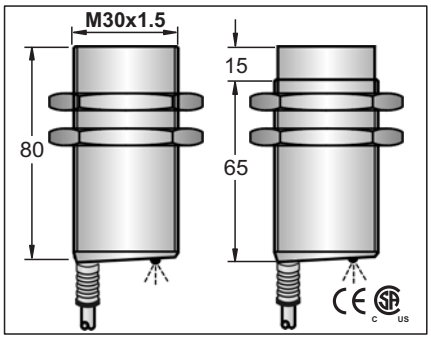

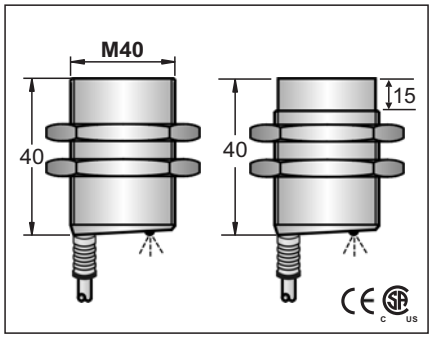

20-250VAC			20-250VAC			20-250VAC	
-			-			-	
<1.8mA			<1.8mA			<1.8mA	
400mA			400mA			400mA	
<1.8mA			<1.8mA			<1.8mA	
5A(20ms)			5A(20ms)			5A(20ms)	
5mA			5mA			5mA	
<8V AC at 40mA			<8V AC at 40mA			<8V AC at 40mA	
<25Hz			<25Hz			<25Hz	
10ms/10ms			10ms/10ms			10ms/10ms	
<15%(Sr)			<15%(Sr)			<15%(Sr)	
<1.0%(Sr)			<1.0%(Sr)			<1.0%(Sr)	
IP67			IP67			IP67	
-25 °C - +70 °C			-25 °C - +70 °C			-25 °C - +70 °C	
<10%(Sr)			<10%(Sr)			<10%(Sr)	
NO			NO			NO	
–			–			–	
–			–			–	
RFI>3V/m / EFT>1KV / ESD>4KV (contact)			RFI>3V/m / EFT>1KV / ESD>4KV (contact)			RFI>3V/m / EFT>1KV / ESD>4KV (contact)	
IEC 60947-5-2,Part 7.4.1 / IEC 60947-5-2,Part 7.4.2			IEC 60947-5-2,Part 7.4.1 / IEC 60947-5-2,Part 7.4.2			IEC 60947-5-2,Part 7.4.1 / IEC 60947-5-2,Part 7.4.2	
Stainless steel			Stainless steel			Stainless steel	
LCS1-3020A-AZL3	65	LCS2-3040A-AZL3	LCS1-4030A-A3L2	11	LCS2-4060A-A3L2	LCS1-4030A-A3S2	11	LCS2-4060A-A3S2
LCS1-3020A-BZL3	65	LCS2-3040A-BZL3	LCS1-4030A-B3L2	12	LCS2-4060A-B3L2	LCS1-4030A-B3S2	12	LCS2-4060A-B3S2
			5.8∅3x0.5			5.8∅3x0.5		
Approx.187 g		Approx.179 g	Approx.247 g		Approx.237 g	Approx.209 g		Approx.208 g

Note:
Coming Soon : Part numbers with underline

AC METAL FACE LONG SENSING DISTANCE PROXIMITY SWITCH

M40		M 40	
●	○	●	○
30mm	60 mm	30 mm	60 mm
stainless steel		Stainless steel	
●		●	

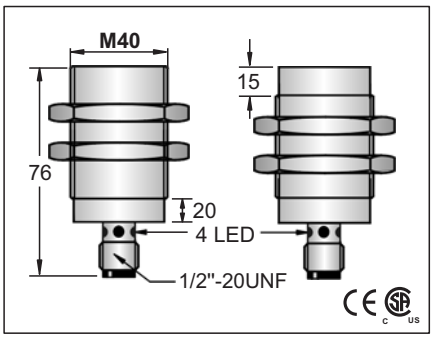

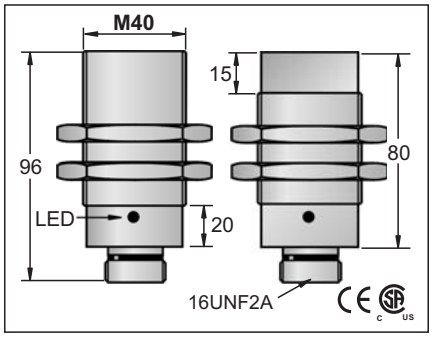

20-250VAC	20-250VAC
-	-
<1.8mA	<1.8mA
400mA	400mA
<1.8mA	<1.8mA
5A(20ms)	5A(20ms)
5mA	5mA
<8V AC at 40mA	<8V AC at 40mA
<25Hz	<25Hz
10ms/10ms	10ms/10ms
<15%(Sr)	<15%(Sr)
<1.0%(Sr)	<1.0%(Sr)
IP67	IP67
-25°C - +70°C	-25°C - +70°C
<10%(Sr)	<10%(Sr)
NO	NO
–	–
–	–
RFI>3V/m / EFT>1KV / ESD>4KV (contact)	RFI>3V/m / EFT>1KV / ESD>4KV (contact)
IEC 60947-5-2,Part 7.4.1 / IEC 60947-5-2,Part 7.4.2	IEC 60947-5-2,Part 7.4.1 / IEC 60947-5-2,Part 7.4.2
Stainless steel	Stainless steel

LCS1-4030A-AUL3	56	LCS2-4060A-AUL3	LCS1-4030A-AZL3	65	LCS2-4060A-AZL3
LCS1-4030A-BUL3	56	LCS2-4060A-BUL3	LCS1-4030A-BZL3	65	LCS2-4060A-BZL3

Approx.147 g	Approx.137 g
Approx.187 g	Approx.179 g

Note:
Coming Soon : Part numbers with underline